## EPA Product Components:

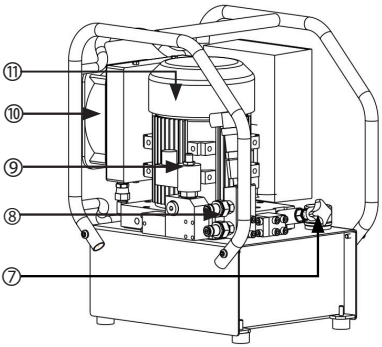


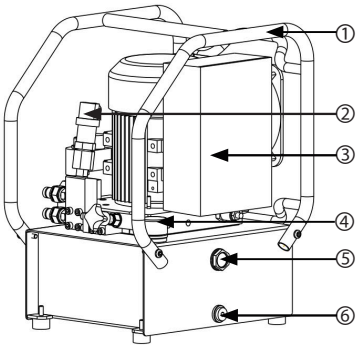


| NO | Name |
|---|---|
| 1 | Protected Framework |
| 2 | Pressure Sensor |
| 3 | Electric Cabinet |
| 4 | Refueling And Exhaust Outlet |
| 5 | Oil Level Gauge |
| 6 | Oil Outlet |
| 7 | Relief Valve |
| 8 | Quick Interface |
| 9 | Electromagnetic Unloading Valve |
| 10 | Air Cooled Radiator |
| 11 | Power-Driven Machine |

## Component Function Introduction:

### Digital Indication Control Handle

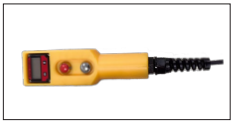

The EPA is equipped with two button handles, both of which are self-reset buttons. Among them, the red button is used to control the switching motor (pressure) operation, and the silver button is used to control the opening and closing of the electromagnetic unloading valve. Equipped with LCD display, can display the system pressure value in real time with high precision.

### Overflow Pressure Regulating Valve

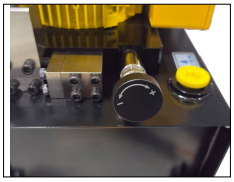

Before use, adjust the system pressure through the relief pressure valve first, then connect the tool to prevent damage from excessive pressure. Loosen the locking nut on the relief valve and rotate it counterclockwise a few times to ensure that the real-time pressure is below the target pressure. Press red button on the handle to start the motor, and the pressure begins to build up. Continue pressing this button while rotating the relief pressure valve clockwise to reach the target pressure, then tighten the nut.

### Electromagnetic Unloading Valve




The on/off of the electromagnetic unloading valve is controlled by the silver button of the control handle.

When the electromagnetic unloading valve is powered off:

Hydraulic oil is output through the outlet, the system pressure is established after the motor starts, and the pressure is maintained after the motor is turned off.

When the electromagnetic unloading valve is energized:

Hydraulic oil flows back to the tank through the return channel, and the system pressure cannot be established.

### Pressure Sensor



The pressure sensor can convert the pressure signal into an electrical signal, monitor the pressure of the system in real time, and transmit the pressure data to the LCD display of the control handle in real time through the bus to realize the dynamic monitoring of the hydraulic system. In terms of control operation, it can feedback signals for the control system to adjust the output parameters of the pump, and it can also cooperate with the realization of start-stop automation.

## ▶ Oil Level Indicator



This port is a non-sealed port, and the slight leakage of hydraulic oil during transportation is normal. The exhaust plug should be installed when using to ensure good ventilation of the tank.

- The oil level should be observed after all actuating elements have returned to their positions.

## ▶ Product usage steps:

### 1.Preparation Before Use

-Check all parts (frame, motor, etc.) are undamaged, the feet are stable, and the connection is not loose.

-Check the rated voltage (EPA electric ultra high pressure pump has two standard voltages of(220V/115V).




Check the electronic control box to determine the rated.

- After confirming that the voltage is consistent, use a power socket in accordance with specifications to connect reliably. If the voltage is not consistent, do not force the adapter connection to avoid burning out the motor or causing short circuit

-Check the hydraulic oil level of the pump. The oil level should be above 2/3 of the upper oil gauge. When the hydraulic oil is insufficient, open the filling port and inject the wear-resistant hydraulic oil of the same model as the original pump (it is recommended to use the hydraulic oil grade ISO VG46). The maximum filling amount is the top of the oil gauge.



Hydraulic oil level




If the oil level is lower than 2/3 of the upper oil gauge scale line,the outlet plug should be removed and the hydraulic oil replenishment operation should be performed.

-Install the exhaust plug, align the exhaust plug with the fuel filling exhaust port, and then rotate it slowly in a clockwise direction until it is tightened to the appropriate degree. Ensure that the tank ventilation function is maintained; replace the exhaust plug during handling or transportation, and reinstall the sealing plug to ensure that it is sealed to prevent oil leakage.




Exhaust plug

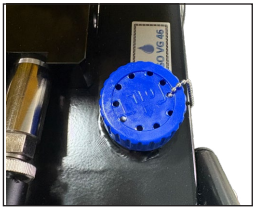

Install the exhaust plug

- If the exhaust plug is not installed to discharge air, it will seriously affect the normal operation of the equipment. The internal air in the oil tank will cause pressure fluctuation and flow deviation, causing component wear and failure, reducing the smoothness and accuracy of operation.

## 2.Start And Pressure Setting

- Turn on the power, press the motor switch on the handle, trigger the motor to run, check whether the motor is running normally, and observe the digital display screen on the handle to display the pressure degree.

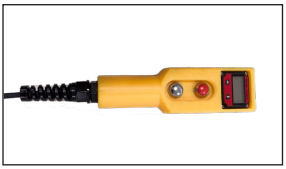

Press the motor start button to start the motor.

### -Set the working pressure

**Preparations:** Before pressure adjustment, make sure that the unloading valve is not energized and not connected to tools or other hydraulic equipment.

**Initial adjustment:** rotate the locking nut on the relief valve counterclockwise to release, and rotate the relief valve counterclockwise several times to ensure that the real-time pressure is lower than the target pressure.

**Start and observe:** After connecting the power supply, press the motor switch (red) button on the control handle, the motor starts and pressure is established.

**Pressure regulation and verification:**

**-Set target pressure:**

- Continue to press the control handle pressure button (red) and rotate the overflow pressure regulating valve clockwise slowly until the pressure gauge indicates the target pressure.
- Maximum pressure limit: EPA1500 is 1500bar.

◆ The pump pressure can only be adjusted from low to high, not in reverse. If the pressure needs to be adjusted from high to low, unloading is required first. The relief valve pressure should be adjusted below the target pressure, and then the relief valve should be repressurized to the target pressure.

**-Pressure holding verification:**

- Release the handle button, and the system automatically maintains pressure after the motor stops. If overpressure occurs, hold down the control handle solenoid unloading valve to discharge the unloading valve to below the target value, release the solenoid unloading valve to close the unloading valve and readjust.

◆The pressure of the relief valve is not affected by the counterclockwise adjustment under the pressure holding condition.

**-Calibration and verification:**

- Press the control handle solenoid unloading valve button to depressurize the unloading valve to 0, release and close the unloading valve.
- Restart the motor and observe whether the pressure is consistent with the target value.
- Two pressures are consistent and effective; if not, adjust until the target is reached.

**Locking and closing:**

- Lock the nut on the relief valve.
- Final depressurization: Press thesolenoid unloading valve button on the handle to completely unload and

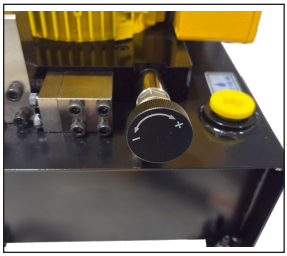

Loosen the locking nut to adjust the overflow pressure.

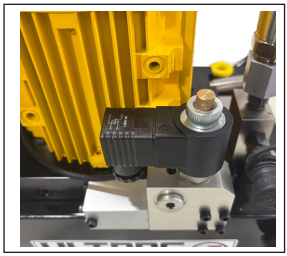

When depressurizing, hold the solenoid unloading valve on the handle and reduce the system pressure to the pressure indicator number 0.

-Connect the extender, and install a CEJN female connector (or male connector) at theoutlet. The outlet thread is G1/4, with a standard plug. The rated pressure of the electric pump is 1500Bar.

**Retreat of the outer lock ring:** Push the outer lock ring of the joint axially backward to make the joint in a state of connection.

**Axial alignment insertion:** Keep the tubing and fitting aligned axially, and slowly and smoothly insert the tubing into the fitting along the axial direction.

**Forward push rotation lock of the outer lock ring:** When the tubing is fully inserted into the joint, push the outer lock ring forward along the axial direction until the outer lock ring reaches the locking position and is firmly locked. The fixing condition of the outer lock ring can be checked by pushing it with appropriate force to ensure that it is locked in place.

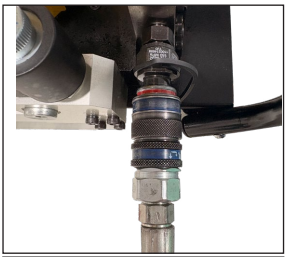

The outer lock ring is pushed back, and the oil pipe isfully pushed into the outlet by axial alignment.

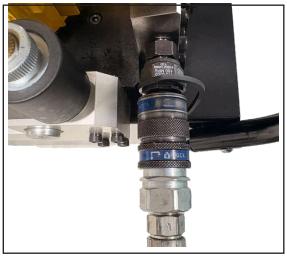

After pushing the oil pipe, push the outerlock ring forward and rotate itclockwise to lock.

◆ The EPA ultra high pressure electric pump must be connected to the same or higher pressure and matching connectors or hoses when in use. Connecting to a connector or hose with a lower pressure rating may cause the connector to fly out or the oil pipe to burst, which may cause personal injury to the user.

## 3.Operation And Adjustment Of Work

-Start the electric pump, confirm that the pressure has been set and the load equipment is connected correctly, press the motor start button on the control handle to start the electric pump.

-In the process of work, pay real-time attention to the pressure gauge value, and adjust the overflow pressure regulating valve through fine-tuning to maintain the working pressure of the system at the target value, so as to ensure that the pressure fluctuation is controlled within a reasonable range.

## 4.Monitoring During Operation

-Pressure monitoring: pay real-time attention to the pressure gauge value, and adjust the overflow pressure regulating valve through fine adjustment to maintain the working pressure of the system at the target value, so as to ensure that the pressure fluctuation is controlled within the range of ±0.5MPa.

-Oil level monitoring: continuously observe the oil quantity of the oil gauge. If the oil level is too low, stop the machine immediately. After the equipment is cooled, slowly inject an appropriate amount of ISO VG46 anti-wear hydraulic oil through the oil filling exhaust port to restore the oil level to the normal range. During the process of adding oil, pay attention to avoid impurities mixed into the hydraulic oil.

-Overload Protection Monitoring: Assuming the electrical control box is equipped with an overload protection device, when the system is overloaded, the safety plug will automatically pop out to trigger emergency stop protection. Operators should first check the cause of the overloading under power-off conditions, resolve the fault, and reset the safety plug before restarting the equipment. It is strictly prohibited to forcibly reset and start the equipment without resolving the overloading fault to avoid severe damage to the equipment.



Overload Protector

## 5.Release Pressure And Shut Down

-Turn off the motor: After the work is completed, release the motor stop (red) button on the control handle, turn off the motor, then cut off the power supply, pull out the power plug, and ensure that the equipment is completely powered off.

-Cut off the oil circuit: Press the solenoid unloading valve on the control handle, start the electromagnetic unloading valve, and reduce the pressure to 0 to achieve system depressurization.

-Remove the oil pipe: After the system pressure has completely dropped to 0 and the stretcher has fully returned, pull out the hydraulic oil pipe. When removing the oil pipe, be careful to avoid splashing any residual hydraulic fluid inside, to prevent injury or contamination of the work environment. Properly organize and store the removed oil pipe for future use.

## Troubleshooting:

| Troubleshooting Guide | | |
|---|---|---|
| Issue | Possible causes. | Solution |
| 1. The pump does not start | Not connected to a power source. | Check whether the circuit is connected normally and restart. |
| | The electrical circuit of the pump is short-circuited or tripped. | Check whether the circuit is connected normally and restart. |
| | The voltage is too low. | Check the voltage and turn off other electrical loads. |
| | The socket cord is too long and too thin | Replace the high-power socket strip |
| | The handle button is damaged. | Contact the manufacturer for repair. |
| | Pump components are damaged. | Contact the manufacturer for repair. |
| 2. The motor stops during pressurization | The voltage is too low. | Check the voltage and turn off other electrical loads. Replace the strip and check the input voltage. |
| | Current overload | Check the system for large damping terms that are causing overpressure. |
| 3. The pump is not pressurized or the upper pressure is too low | Insufficient amount of oil. | Check the oil level and inject new hydraulic oil. |
| | The electromagnetic unloading valve opens. | Check the energization of the unloading valve. |
| | Leakage from the outside of the pump. | Observe leaks and carry out repairs or replacement of accessories. |
| | The hydraulic oil is too dirty and blocking the suction port. | Change the hydraulic oil and clean the suction port. |
| | Leakage inside the pump. | Contact the manufacturer for repair. |
| | System leaks. | Check for system leaks and repair them. |
| 4. The system establishes pressure, and the tool does not move | Overloaded. | Check and select the right load. |
| | System congestion. | Check if the system is clogged and unblock the system. |
| 5. The flow is too small | The hydraulic oil is too dirty and blocking the suction port. | Change the hydraulic oil and clean the suction port. |
| | There is a throttle valve in the system | Adjust the throttle flow. |
| | System congestion. | Check if the system is clogged and unblock the system. |
| 6. The tool cannot be returned normally | The tool backstroke has a large damping | Check and remove the large damping term. |
| | The system has a return throttle valve. | Check the system and adjust the throttle valve. |
| | The system throttle valve adjustment is smaller. | Check the circuit and readjust the flow valve. |
| | Motor failure. | Contact the manufacturer for repair. |
| 7. Severe fever | The system throttle valve adjustment is smaller. | Check the circuit and readjust the flow valve. |
| | Motor failure. | Contact the manufacturer for repair. |