ULTPRE
ultra high pressure hydraulic tools

▼ EPA1500-RC Digital Indication Electric Pressure Pumps



Maximum output pressure:	150MPa
Motor power:	1.1KW
Low pressure flow:	2.5L/Min
High pressure flow:	0.3L/Min
Available oil capacity:	5L

- Ultra-high pressure electromagnetic unloading, equipped with emergency manual unloading valve
- 6 meters double button wire control handle, equipped with LCD display, can display the system pressure value in real time with high precision.
- Pump built-in safety valve
- External lockable pressure regulator
- Brushless motor maintenance-free, low noise
- Gear pump, plunger pump structure, two-stage flow
- Efficient air cooled radiator, low temperature rise in continuous operation
- Integrated frame winder design Easy control line storage
- Quick disassembly of pressure gauge without rotation
- Standard with two output interfaces

▼ EPA1500-RC Type Specification Sheet:

Model Number	Voltage	Motor Power	Low Pressure Flow	High Pressure Flow	Available oil capacity	Number of oil outlets	Weight without oil
EPA1500RC	230VAC	1.1KW	2.5L/Min	0.3L/Min	5L	2	30KG
EPA1500RC-115/60	115VAC	1.1KW	2.5L/Min	0.3L/Min	5L	2	30KG

▼ EPA 1500-RC Product Illustration:

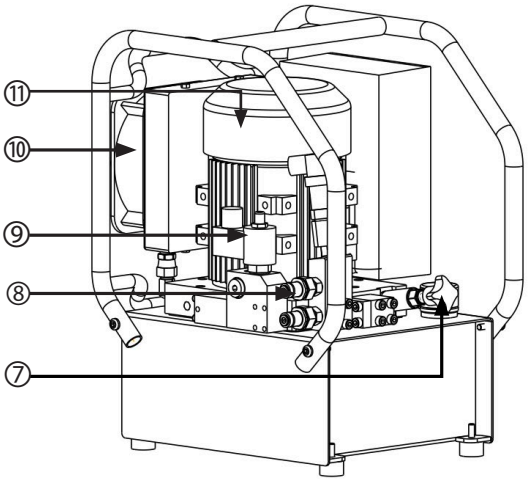

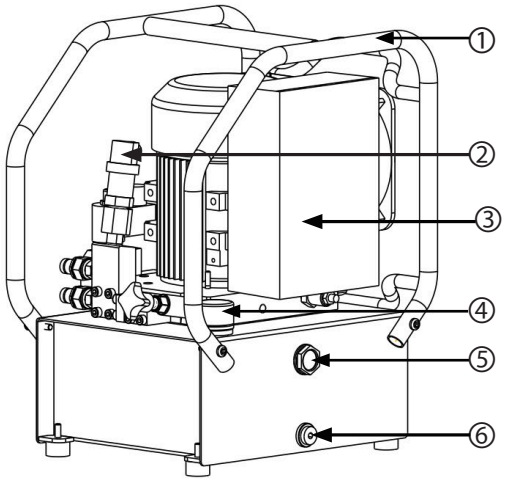

NO	Name
1	Protected Framework
2	Manometer
3	Electric Cabinet
4	Refueling And Exhaust Outlet
5	Oil Level Gauge
6	Oil Outlet
7	Relief Valve
8	Quick Interface
9	Electromagnetic unloading valve
10	Air cooled radiator
11	Power-Driven Machine

▼ EPA 1500-RC Outline Dimensional Drawing:

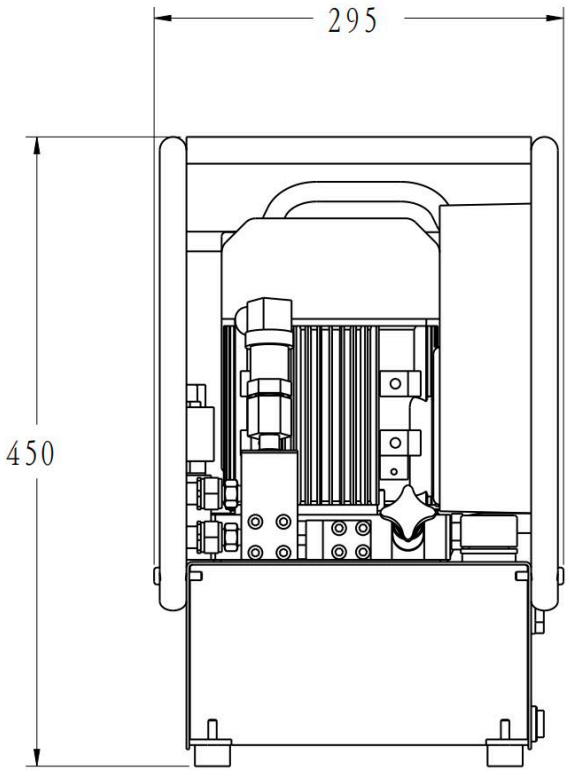

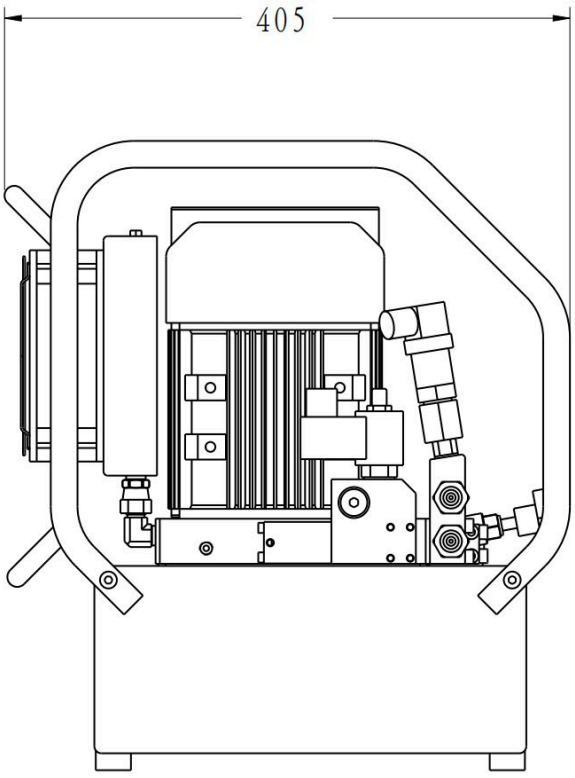

▼ EPA 1500-RC Hydraulic Schematic Diagram:

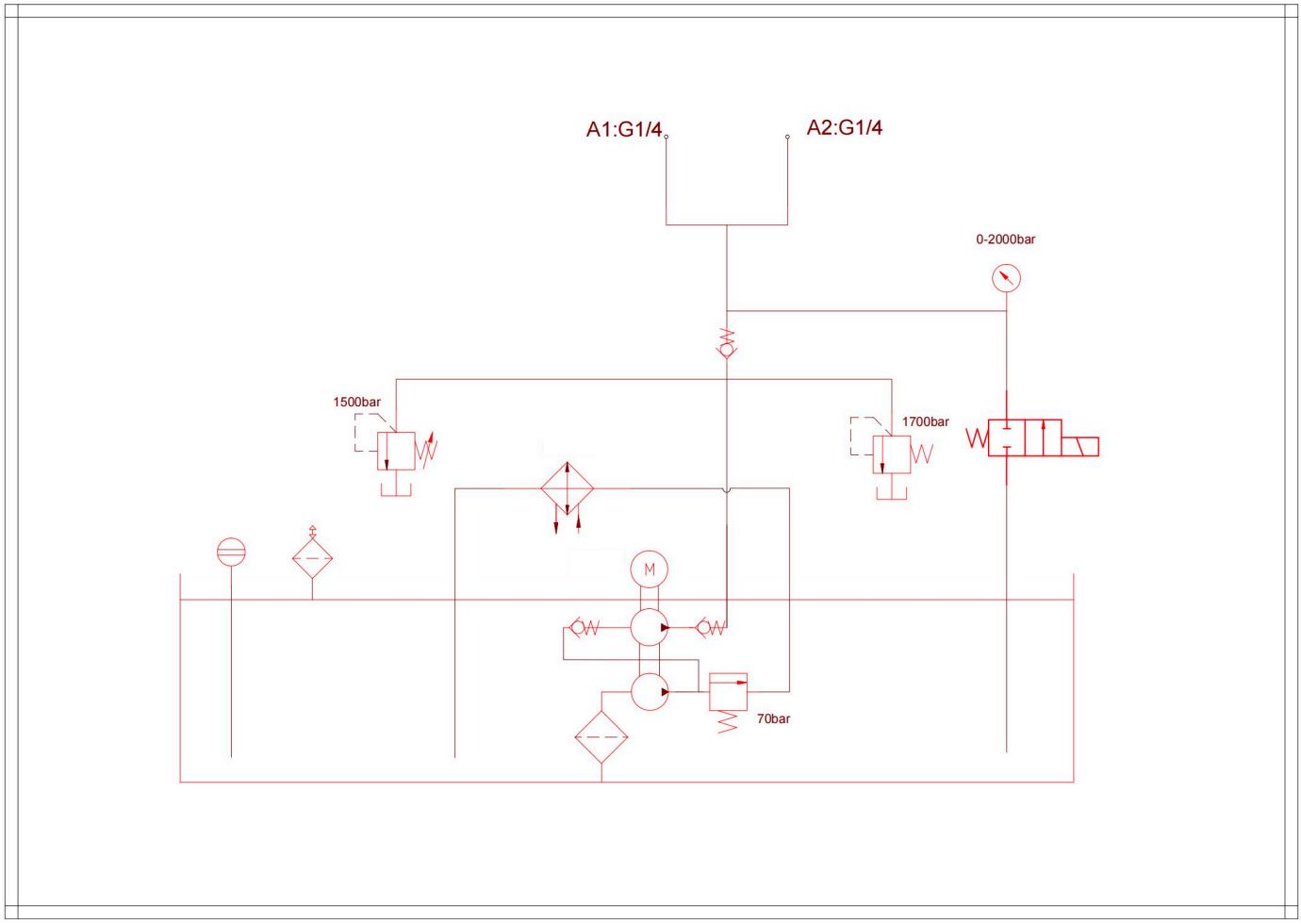

▼ EPA 1500-RC Flow-Pressure Curve：

